Journal of Physics:
Conference Series

PURPOSE-LED PUBLISHING™

PAPER • **OPEN ACCESS**

Ultrasonic tool for the realization of combined action during the drilling of extraterrestrial objects

To cite this article: Vladimir N Khmelev *et al* 2020 *J. Phys.: Conf. Ser.* **1679** 042033

View the article online for updates and enhancements.

You may also like

- Legal Traceability of Information Leakage of Artificial Intelligence Rural E-commerce Shopping Guide Platform Based on Big Data
Xiaowen Huang
- The Effect of Stirring Time and Concrete Compaction on K-200 Concrete Press Strength
Y Cahyo, AI Candra, E Siswanto et al.
- Digitalization of Large-Scale Testing Facilities for the Wind Industry: DIGIT-BENCH Digital Twin
Elif Ecem Ba, Giuseppe Abbiati, Cláudio Ângelo Gonçalves Gomes et al.

This content was downloaded from IP address 103.135.102.194 on 22/07/2025 at 14:42

Ultrasonic tool for the realization of combined action during the drilling of extraterrestrial objects

Vladimir N Khmelev[1], Roman V Barsukov[1], Viktor A Nesterov[1], Dmitry V Genne[1], Qiquan Quan[2] and Roman N Golykh[1]

[1]Biysk Technological Institute (branch) of Altai State Technical University named after I.I. Polzunov, 659305, Russian Federation, Altai region, Biysk city, street named after Hero of Soviet Union Trofimov, 27
[2]Harbin Institute of Technology, 92 Xidazhi St, Nangang, Harbin, Heilongjiang, China

E-mail: romangl90@gmail.com

Abstract. The article is devoted to the problem of the efficiency increase of ultrasonic drilling of hard materials for the studies of the soils of the planets, asteroids and other space objects. It is proposed the solution of the problem by the help of developed device, which is able to realize simultaneously with ultrasound the action by low-frequency macro-oscillations and rotational motion of the leading edge of the tool. The tests of the practical construction of the developed device showed the possibility of the speed increase of the ultrasonic drilling due to the additional low-frequency oscillations and pseudo-rotation in up to 1.5 times.

1. Introduction

Large and small extraterrestrial objects, such as planets, comets, asteroids are the objects for the studies. It is studied both the atmosphere of the extraterrestrial objects and the object as a source of the determination of chemical composition, structure and the finding of different forms of life. As a rule the soil intake is carried out in the form of the cores taken from various depths by the drilling of hollow tubular toll. The depth of the drilling can be several meters at the core diameter of 50 mm.

Recently the attention of the scientists is attracted by small space objects (comets, asteroids of various masses and sizes), which studies allow to receive information on near and far space. However, at the carrying out of studies on the small space objects (with low gravitation) besides the objects drilling it is solved the problem of space apparatuses fastening on them by the anchoring elements placed into the soil to the previously drilled channels.

Traditional drilling methods (by the rotated drill) under extraterrestrial conditions are not practically applied due to the high clamping force that at the drilling of the objects with low gravitation is inadmissible, the heating of the drilling zone leading to volatilization of water and low-melting materials during the study of the soil structure and its analysis. Moreover traditional drilling is characterized by high energy consumption [1].

As an alternative of the drilling method it is considered ultrasonic drilling, at which the working tool realizes mechanical action on the object at the ultrasonic frequency directly or through the layer of abrasive grains [2]. Such method is more efficient in comparison with the traditional one, as it does not require large pressing force, excludes the heating in the drilling zone and allows drilling any materials.

Content from this work may be used under the terms of the Creative Commons Attribution 3.0 licence. Any further distribution of this work must maintain attribution to the author(s) and the title of the work, journal citation and DOI.
Published under licence by IOP Publishing Ltd

Unfortunately, ultrasonic drilling has a number of disadvantages – low depths of the drilling due to the damping of the working tool by the material to be destroyed, the complexity of the introduction of new abrasive particles to the drilling zone at the high depths. Moreover there is a necessity of further drilling speed increase.

Partially the problem concerned with the damping of the ultrasonic working tool and the removal of the waste from the drilling zone can be solved by its additional rotation (continuous in one direction or discontinuous with sequential change of the rotational direction). As the practical tests show [3, 4], the presence of the additional rotation at the simultaneous ultrasonic action gives the additional effect at the drilling of hard materials, such as marble or granites.

One more method of ultrasonic drilling is the drilling with the application of low-frequency oscillations on the working tool, which is structurally separated from the ultrasonic oscillating system and oscillating due to shock impact of loading mass, which in turn periodically gets impulse at the collision with the element of the ultrasonic oscillating system oscillating at the ultrasonic frequency [5, 6]. The appearance and the efficiency of low-frequency oscillations essentially depends on the physical properties of the medium, the parameters of the loading mass, the working tool, the parameters of the ultrasonic oscillation source (amplitude, frequency), the force applied to the working tool. That is why under specified conditions the mode of low-frequency oscillations cannot appear; the periodic separation of the tool from the oscillating system not only decreases the efficiency of ultra-sonic action, but excludes the possibility to control the influence of processed media for the process monitoring.

Thus, there is a necessity to develop the device of combined drilling [7, 8], in which the mechanism of ultrasonic drilling dominates, and macro-oscillations of the working tool and its rotation are the factors increasing the efficiency. Such construction allows increasing drilling efficiency due to continuous action of ultrasonic oscillations on the object, the additional low-frequency oscillations, which have high amplitude of the action and the rotation that at the presence of the teeth at the leading edge of the drilling tool will make additional work.

The main condition of the new tool design is that developed construction should exclude short-time loss of contact with the oscillating system to provide the possibility of continuous control [9] of processed media during the drilling process.

Further it is considered the device of combined ultrasonic drilling and the results of the practical construction study intended for the combined action on the objects during the drilling.

2. Construction description

To increase the efficiency of the drilling of hard and brittle soils under extraterrestrial conditions it is proposed and developed the construction of the device of combined ultrasonic drilling, which has ultrasonic drilling with shock low-frequency and rotational motion of the working tool (figure 1).

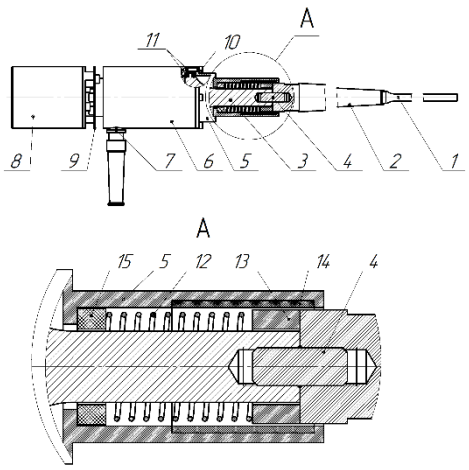

Figure 1. Scheme of ultrasonic tool for drilling.

Figure 1 shows the scheme of the construction of considered ultrasonic tool, which consists of the half-wave active working tool 1, the concentrating waveguide 2 (the concentrator), the piezoelectric transducer 3, the connecting stud 4, the transducer case 6, its cover 5, the cable input 7, the drive of pseudo-rotational motion 8, the elastic connective node 9, the ring gaskets 10 and 11, the spring 12, the loading mass 13, the fluoroplastic bushing 14, the adjusting washer 15.

The drilling process is realized by the ultrasonic oscillating system consisting of the transducer 3, the concentrator 2 and the working tool 1 in a following way. At the excitation of the ultrasonic transducer 3 (at its connection to the generator of electric oscillations of ultrasonic frequency) placed in the case 6 the ultrasonic oscillating system begins generate longitudinal mechanical oscillations with the frequency of about 20 kHz. The presence of the concentrating waveguide 2 and the working tool 1 made in the form of the tube allows obtaining the amplitude of mechanical oscillations of about 70 μm at the leading edge of the working tool 1. During the drilling the working tool continuously acts on the objects with such amplitude and frequency destroying it.

Low-frequency oscillations of the ultrasonic oscillating system are provided by shock periodic action of the loading mass 13 on the raised end-face of the concentrator 2, with which the loading mass is in contact. The oscillations of the loading mass 13 appear due to its periodic rebound from oscillating part of the concentrator 2. The periodicity of the loading mass rebound, the impulse value, which is transferred from the loading mass to the construction of the ultrasonic oscillating system, is determined by the parameters of the loading mass and force of its pressing to the concentrator by the spring 12. The pressing force of the loading mass to the raised part of the concentrator can be regulated by the adjusting washer 15, which thickness determines the pressing value of the spring 12. The fluoroplastic bushing 14 excludes jamming of the loading mass during its vibration inside the case 5 cover.

As a result of shock low-frequency action of the loading mass on the construction of the ultrasonic oscillating system (including the working tool) it is provided its low-frequency oscillations with the amplitude in ten times exceeding the amplitude of ultrasonic action on the object that provides additional productivity growth of the drilling process.

The drive of the pseudo-rotational motion 8 in addition to the ultrasonic action and low-frequency vibrations of the working tool provides periodic motion of all construction, that at the design of special cutting leading edge of the ultrasonic tool 1 increases productivity of the drilling process.

Thus, combined action on the materials varied in their properties, drilling of which is realized each case, will automatically provide the efficiency increase of the drilling process.

3. Results of the experiments

To study functional possibilities of the developed tool it was designed the ultrasonic apparatus, which photo is shown in figure 2.

Figure 2. Ultrasonic apparatus for the drilling.

Given ultrasonic apparatus has following performance features:

- power supply voltage, V – 220;

- AFC system – phase;
- power control range, % – 30-100;
- amplitude stabilization system – yes;
- maximum power, W – 100;
- frequency of supply voltage of the ultrasonic oscillating system, Hz – 20000.

It was carried out the number of the experiments on the definition of the drilling speed of the various samples, at different pressing forces to the samples of the working tool and different operation modes of the ultrasonic tool:

- drilling by the rotation (RD);
- drilling by ultrasound (UD);
- drilling by ultrasonic oscillations with the application of low-frequency vibrations of loading mass (UD+LFV);
- drilling by ultrasonic vibrations with the additional rotation of the working tool (UD+RD);
- drilling by ultrasonic oscillations with the application of low-frequency vibrations and additional rotation of the working tool (UD+LFV+RD).

As samples for the drilling silicate construction brick, red construction brick, foam concrete building block were used.

Table 1 shows the main parameters of the ultrasonic drilling apparatus and its pseudo-rotation system.

Table 1. Main parameters of the ultrasonic working tool and its pseudo-rotation system.

Parameter	Value
Amplitude of oscillations of the leading edge of the working tool, μm	70
Pressing force of ultrasonic working tool to the sample, N	5, 10, 20
Rotation angle of pseudo-rotation system of the ultrasonic working tool, degree	100
Frequency of pseudo-rotational motion, Hz	1
Frequency of low-frequency oscillating motion, Hz	20
Pressing force of the loading mass to oscillating surface of the concentrating waveguide 2, N	12

Tables 2, 3, 4 show the results of the drilling of the samples: silicate brick, red brick and foam concrete, respectively.

Table 2. Silicate brick. Results of the drilling.

Pressure on the sample, N	Drilling speed, mm/min				
	RD	UD	UD+RD	UD+ LFV	UD+ LFV+RD
20	4	27	30	30	42
10	2	16	17	18	24

Table 3. Red brick. Results of the drilling.

Pressure on the sample, N	Drilling speed, mm/min				
	RD	UD	UD+RD	UD+ LFV	UD+ LFV+RD
20	3	9	11	10	13
10	1	14	14	15	17
5	1	13	13	14	18

Table 4. Foam concrete. Results of the drilling.

Pressure on the sample, N	Drilling speed, mm/min				
	RD	UD	UD+RD	UD+ LFV	UD+ LFV+RD
20	11	122	134	136	154
10	10	91	102	100	136
5	5	55	59	60	102

The analysis of obtained results allows stating following:

1. It was proved the efficiency of ultrasonic drilling in comparison with the drilling by low-frequency oscillations or the drilling only by the rotation (the drilling speed increased in 3...10 times).
2. The drilling speed depends on the pressure of the working tool on the sample. At the drilling of brittle porous materials it raises, that is evident at the drilling of foam concrete samples. However, at the drilling of hard materials (like red brick) it increases at reduction of the pressure.
3. Additional to ultrasonic separate low-frequency oscillating action and additional rotation during the drilling does not allow increasing the drilling speed in more than 10%.
4. Additional to ultrasonic and acting simultaneously with it low-frequency oscillating action and additional rotation during the drilling allows increasing the drilling speed in 1.5 times.
5. The maximum drilling speed was obtained at the foam concrete samples, minimum one was for the samples of red brick.

4. Conclusion

As a result of carried out studies it was proposed and developed the construction of the ultrasonic apparatus intended for the drilling of hard and brittle soils, in which it was realized complex action by ultrasonic high-intensity oscillations (the amplitude of mechanical action was about 70 μm) on the object with additional application on the leading edge of low-frequency high-amplitude vibrations realized without the separation of the working tool from the oscillating system and pseudo-rotational motion. The realization of complex action provided the growth of the drilling speed in comparison with ultrasonic drilling in 49%.

The use of application of low-frequency high-amplitude vibrations without the separation of the tool from the oscillating system allows excluding the energy losses of ultrasonic oscillations during the drilling with the vibration and realizing the control parameter system of processed media on the base of continuous control of the electric parameters of the oscillating system for definition of the soil characteristics during its drilling.

Acknowledgement

The reported study was supported by RFBR and NSFC (scientific project No. 19-52-53018).

References

[1] Jeffrey A G 2012 *Pioneer Natural Resources/ Geoscience, Engineering and Drilling Technology Conference* **TX October 15**
[2] Khmelev V N, Barsukov R V and Tsyganok S N 1999 *Ultrasonic dimensional processing of the materials* (Barnaul: AltSTU) p 127 In Russian
[3] Khmelev V N, Kostenko V I, Barsukov R V and Genne D V 2013 *South-Siberian Scientific bulletin* **2** 36
[4] Khmelev V N, Nesterov V A, Genne D V and Ilchenko E V 2019 *20th International Conference of Young Specialists on Micro/Nanotechnologies and Electron Devices EDM 2019: Conference Proceedings* (Novosibirsk, Russia) p 275
[5] Wang Y, Quan Q, Yu H, Bai D, Li H and Deng Z 2018 *IEEE Access* **6** 37796
[6] Shen Y, Li H, Wang Q, Wang Y, Bai D and Deng Z 2018 *Shock and Vibration* Article ID **8368012**

12
[7] Khmelev V N, Khmelev S S, Nesterov V A, Genne D V, Tsyganok S N and Kostenko V I 2012 *XIII International Conference and Seminar on Micro / Nanotechnologies and Electron Devices EDM* (Novosibirsk, Russia) p 162
[8] Khmelev V N, Genne D V, Khmelev S S, Barsukov R V and Kostenko V I 2013 *14th International Conference of Young Specialists on Mi-cro/Nanotechnologies and Electron Devices EDM 2013* (Novosibirsk, Russia) p 123
[9] Khmelev V N, Khmelev S S and Genne D V 2014 *Polzunovskiy vestnik* **2** 111